Rating	220V AC
Insulation Resistance	DC 500V 100M ohm Min
Dielectric Strength	AC 1500V 1 Minute
Operation Temperature	-20°C~80°C
Color	Red

Mounting Hole

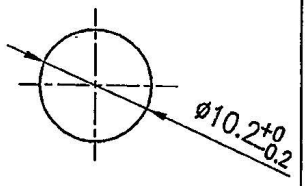

Circuit Diagram

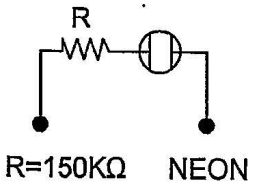

Material:
Frame: PC,Red
Base: PF,Black
Terminal: Nickel plated brass

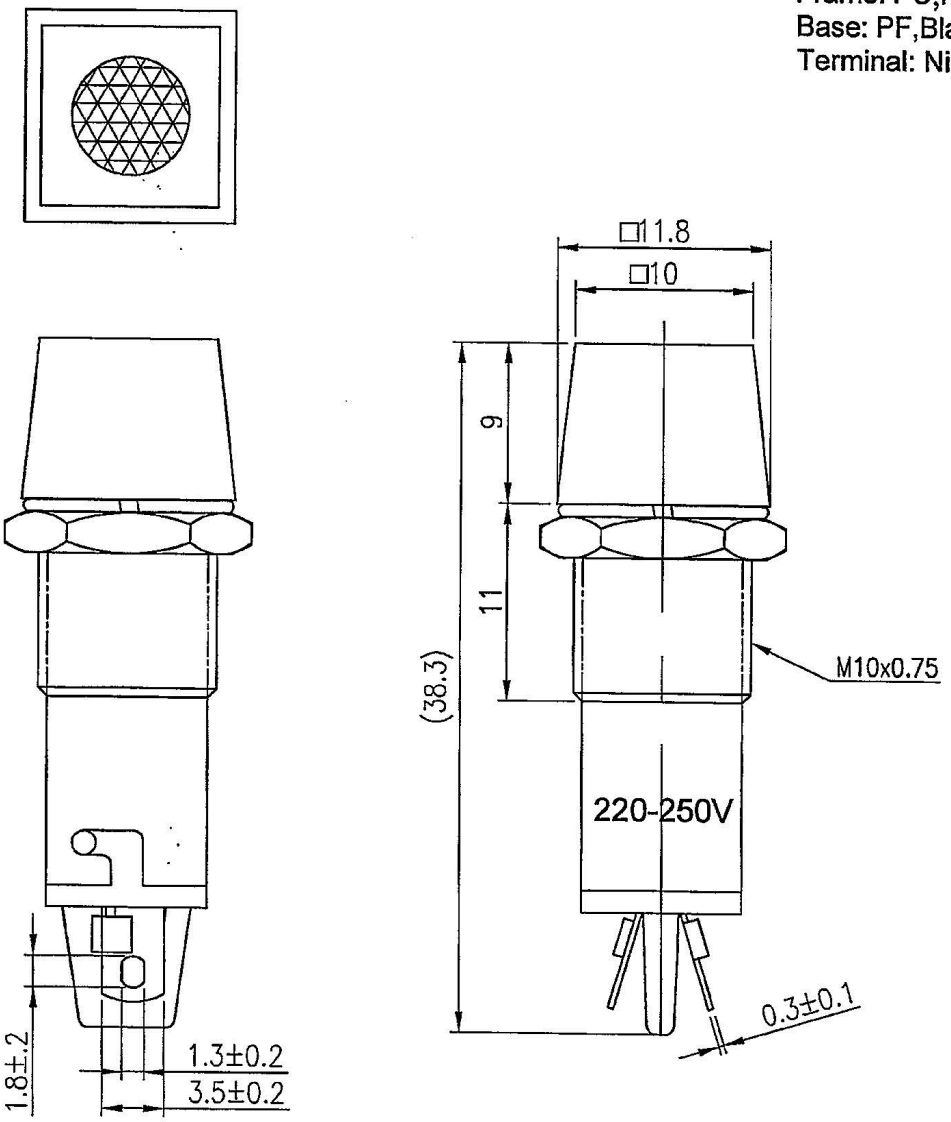

Tolerances ±0.3 Unless Otherwise Specified

							△
							△
Date	Name	Description					No.
Drawn	Checked	Approved	SCI BOM No.	1710309	Model Name	NEON INDICATOR	
柳新強		研發部 2015.11.9 李元生	Customer No.		Model No.	R9-40N5-05-R	Rev.
11/04/'16			Unit	mm	Shin Chin Industrial Co., Ltd.		0